Solving Pure Torsion Problem and Modelling Radionuclide Migration Using Radial Basis Functions

Leopold Vrankar(1), Goran Turk(2) and Franc Runovc(3)

Abstract: *Many problems in science and engineering are reduced to a set of partial differential equations (PDEs) through the process of mathematical modelling. Although the model equation based on established physical laws may be constructed, analytical tools are frequently inadequate for the purpose of obtaining the solution. A relatively new approach of solving PDEs is the use of radial basic functions (RBFs) for hyperbolic, parabolic and elliptic PDEs. The paper presents two applications of the RBFs. In the first one a pure torsion problem is solved using stress and strain methods. The second one is intended for the modelling of the movement of radionuclides through geosphere at disposing of radioactive waste.*

1 Introduction

The numerical solution of PDEs has been usually obtained by either finite difference methods (FDM), finite element methods (FEM), or finite volume methods(FVM). These methods require a mesh to support the localised approximations. Kansa [1], [2] introduced the concept of solving PDEs using radial basic functions (RBFs) for hyperbolic, parabolic and elliptic PDEs.

As for most interpolation methods, the errors in RBFs approximations tend to be much larger near boundaries. Due to this fact, it makes sense to impose more information right there. Fedoseyev, Friedman and Kansa [3] formulated a method that collocates both the boundary condition and the PDE at the boundary. For the approximation of the solution the Hardy's [4] and inverse multiquadrics function was used.

Here, two problems are solved by the RBFs: In the first one a pure torsion problem is solved using stress and strain methods. The second one is intended for the modelling of the movement of radionuclides through geosphere at disposing of radioactive waste.

2 Pure torsion

We consider a uniform bar with an arbitrary cross-section subjected to torque M_x. The

(1) Slovenian Nuclear Safety Administration, Železna cesta 16, 1113 Ljubljana, Slovenia, (Leopold.Vrankar@gov.si).
(2) University of Ljubljana, Faculty of Civil and Geodetic Engineering, Jamova cesta 2, 1000 Ljubljana, Slovenia, (gturk@fgg.uni-lj.si).
(3) University of Ljubljana, Faculty of Natural Sciences and Engineering, Aškerčeva 12, 1000 Ljubljana, Slovenia, (franc.runovc@uni-lj.si).

following assumptions are made: the cross-sections rotate as rigid surface with the exception of displacements in longitudinal direction which are free. The rate of twist, α, which is assumed to be constant along the bar, is determined by

$$\alpha = \frac{M_x}{G\, I_x},$$

where G is the shear modulus of the material and I_x is the cross-sectional polar moment of area. This mechanical problem may be solved by two distinct methods: stress and strain method.

2.1 Stress method

Stress function $\varphi(y, z)$ is defined as [5]

$$\sigma_{xy} = \frac{M_x}{I_x}\frac{\partial \varphi}{\partial z}, \qquad \sigma_{xz} = -\frac{M_x}{I_x}\frac{\partial \varphi}{\partial y}, \tag{1}$$

where σ_{xy} and σ_{xz} are shear stresses. In order to determine stress function over the cross-section without holes the second order partial differential equation needs to be solved:

$$\mathscr{A}_x: \quad \frac{\partial^2 \varphi}{\partial y^2} + \frac{\partial^2 \varphi}{\partial z^2} + 2 = 0, \tag{2}$$

with corresponding boundary conditions

$$\mathscr{C}_x: \quad \varphi = 0. \tag{3}$$

The polar moment of area is determined by the following equation:

$$I_x = 2 \int\limits_{\mathscr{A}_x} \varphi \, dA_x. \tag{4}$$

2.2 Strain method

The displacements in longitudinal direction $u(x, y, z)$ are expressed in terms of warping function $\Phi(y, z)$

$$u(x, y, z) = \alpha\, x\, \Phi(y, z). \tag{5}$$

The warping function is governed by the second order differential equation

$$\mathscr{A}_x: \quad \frac{\partial^2 \Phi}{\partial y^2} + \frac{\partial^2 \Phi}{\partial z^2} = 0, \tag{6}$$

with the following boundary conditions

$$\mathscr{C}_x: \quad \left(\frac{\partial \Phi}{\partial y} - z - \frac{1}{A_x}\int\limits_{\mathscr{C}_x} \Phi \, dz\right) e_{\eta y} + \left(\frac{\partial \Phi}{\partial z} + y + \frac{1}{A_x}\int\limits_{\mathscr{C}_x} \Phi \, dy\right) e_{\eta z} = 0, \tag{7}$$

where $e_{\eta y}$ and $e_{\eta z}$ are components of the normal to the cross-section boundary. The polar moment of area I_x can be determined from warping function by

$$I_x = \int\limits_{\mathscr{A}_x} \left(y^2 + z^2 + \frac{\partial \Phi}{\partial z}\, y - \frac{\partial \Phi}{\partial y}\, z \right) dA_x. \tag{8}$$

2.3 Numerical example

Only for the very simple cases the solution is obtainable in the closed form. We analysed a relatively simple half circle cross-section, shown on Fig. 1.

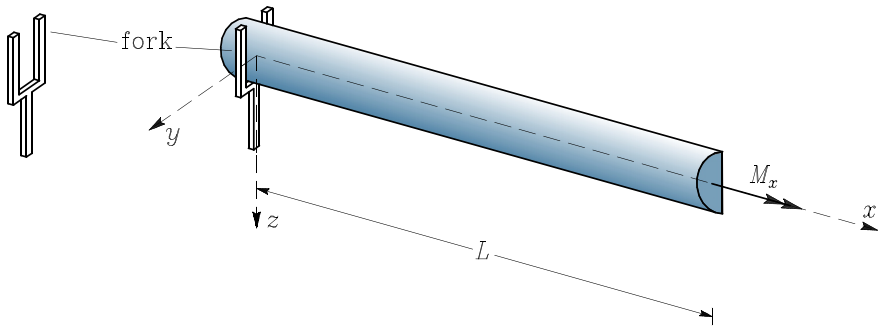

Figure 1: Straight bar subjected to torque

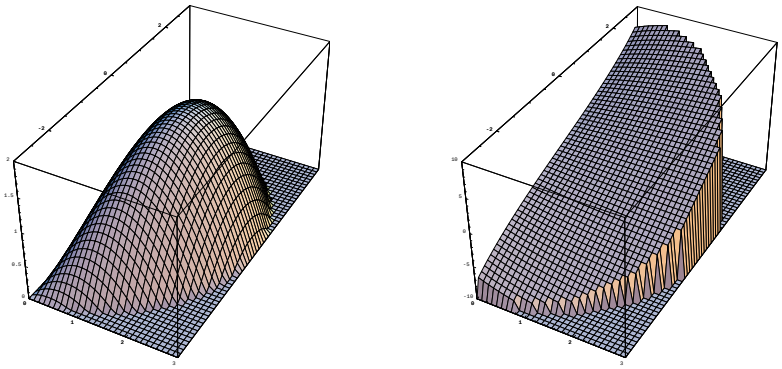

Figure 2: Stress and warping function

The results of the stress and warping function obtained by the meshless method are shown in Fig. 2. Polar moment of area I_x was also determined by equations (4) and (8)

$$I_x = 24.0874 \quad \text{(stress method)}, \qquad I_x = 24.0135 \quad \text{(strain method)}.$$

Both methods give almost the same result, which confirms that the obtained solution of the differential equations were correct.

3 Modelling of the Radionuclide Migration

The disposal of radioactive waste in geological formation is of great importance for nuclear safety and geosphere is considered to be the principal natural barrier, which prevents

or inhibits the movement of radionuclides into biosphere.

The general reliability and accuracy of transport modelling depend predominantly on input data like hydraulic conductivity, water velocity, radioactive inventory, hydrodynamic dispersion, etc. The output data are concentration, pressure, etc. The most important input data are obtained from field measurement, which are not available for all regions of interest. For example, the hydraulic conductivity as input parameter varies from place to place. In such case geostatistical science offers a variety of spatial estimation procedures.

3.1 Laplace equation

The first step of radionuclide transport modelling is to solve the Laplace equation to obtain the Darcy velocity. In this case the Neumann and Dirichlet boundary conditions will be defined along the boundary. It was proposed homogenous and anisotropic porous media. The equation has the following form :

$$K_{x_i}\frac{\partial^2 p_i}{\partial x^2} + K_{y_i}\frac{\partial^2 p_i}{\partial y^2} = 0, \tag{9}$$

where p is the pressure of the fluid and K_{x_i} and K_{y_i} are hydraulic conductivity.

The Laplace equation was solved by using Direct collocation [3]. For the calculation of velocity in principal directions we use Darcy's law [7] :

$$\begin{aligned} v_{x_i} &= -\left(\frac{K_{x_i}}{n\rho g}\right)\frac{\partial p_i}{\partial x}, \\ v_{y_i} &= -\left(\frac{K_{y_i}}{n\rho g}\right)\frac{\partial p_i}{\partial y}, \end{aligned} \tag{10}$$

where n is porosity, g is the gravitational acceleration and ρ is the density of the fluid.

3.2 Advection-dispersion equation

In the next step, the velocities obtained from Laplace equation are used in the advection-dispersion equation.

The advection-dispersion equation for transport through the saturated porous media zone in macroscopic level with retardation and decay is:

$$\begin{aligned} &R\frac{\partial u}{\partial t} = \left(\frac{D_x}{\omega_e}\frac{\partial^2 u}{\partial x^2} + \frac{D_y}{\omega_e}\frac{\partial^2 u}{\partial y^2}\right) - v_{x_i}\frac{\partial u}{\partial x} - R\lambda u, \quad (x,y)\in\Omega\,, \quad 0\le t\le T, \\ &u|_{(x,y)\in\partial\Omega} = g(x,y,t), \qquad 0\le t\le T \\ &u|_{t=0} = h(x,y), \qquad (x,y)\in\Omega, \end{aligned} \tag{11}$$

where x is the groundwater flow axis, y is the transverse axis, u is the concentration of contaminant in the groundwater $[\mathrm{Bqm}^{-3}]$, D_x and D_y are the components of dispersion tensor $[\mathrm{m}^2\mathrm{y}^{-1}]$ in saturated zone, ω_e is the effective porosity of the saturated zone$[-]$, v_{x_i} is Darcy velocity $[\mathrm{my}^{-1}]$ at interior points, R is the retardation factor in saturated zone $[-]$ and λ is the radioactive decay constant $[\mathrm{y}^{-1}]$.

For the parabolic problem, we consider the implicit scheme:

$$R\frac{u^{n+1}-u^n}{\delta t}=\left(\frac{D_x}{\omega_e}\frac{\partial^2 u^{n+1}}{\partial x^2}+\frac{D_y}{\omega_e}\frac{\partial^2 u^{n+1}}{\partial y^2}\right)-v_{x_i}\frac{\partial u^{n+1}}{\partial x}-R\lambda u^{n+1}, \tag{12}$$

where δt is the time step, u^n and u^{n+1} are the contaminant concentration at the time t_n and t_{n+1}.

3.3 Numerical example

The simulation was implemented for rectangular area which was 600 m long and 300 m deep. The source was Thorium $(Th-230)$ with activity $1\cdot 10^6 Bq$ and half life of 77000 years. The source was located on left side of the area. The groundwater flow field is presented for a steady-state conditions. Except for the inflow (left side) and outflow (right side), all boundaries have no-flow condition $\frac{\partial p}{\partial s}=0$ (s taken normal to the boundary). The inflow rate was 1 m/y. At the outflow side, time-constant pressures at the boundaries were set.

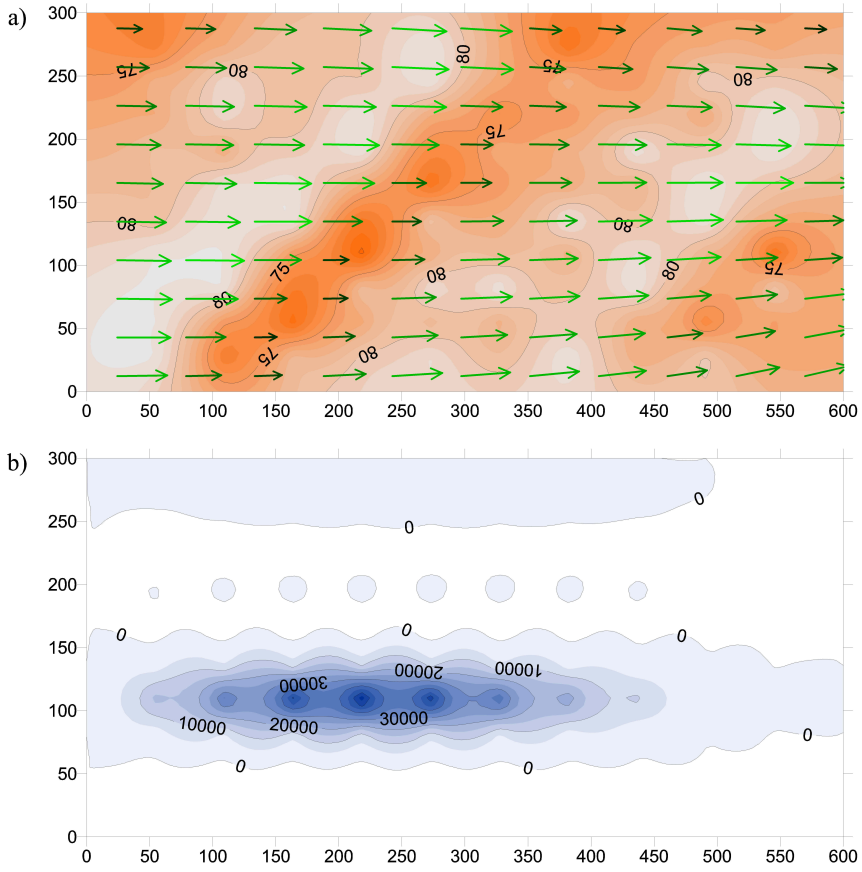

Figure 3: a) Distribution of hydraulic conductivity based on 8-point data set and fluid velocity vectors;
b) Distribution of contaminant concentration after 100 000 years

The components of dispersion tensor are approximated by $D_x = a_L v$ and $D_y = a_T v$. Longitudinal dispersivity, a_L is 500 m and transversal dispersivity, a_T is 2 m, v is Darcy's velocity. Porosity is 0.25 whereas hydraulic conductivity was generated in different points

with geostatistics [6]. Conductivity and velocities are shown on fig. 3a). Concentrations for one of the simulations are presented on fig. 3b).

Conclusions

Kansa method was applied in the solution of four different differential equations.

In the case of pure (unrestrained) torsion shear and warping functions were determined. Since the polar moment of area I_x was determined from both functions resulting in virtually equal result, it was concluded that the sought functions were determined with satisfactory accuracy.

In the case of radionuclide migration two steps of evaluations were performed. In the first the velocities in principal directions were determined from pressure of the fluid p obtained from Laplace differential equation. In the second step the advection- dispersion equation was solved to find a concentration of the contaminant. In this case the method of evaluation was verified by comparing results with the one obtained from finite difference method. Both methods give very similar results.

References

[1] E.J. Kansa (1990) Multiquadrics - A Scattered Data Approximation Scheme with Applications to Computational Fluid - Dynamics - I - Surface Approximations and Partial Derivative Estimates. Computers Math. Applic. Vol. 19, No. 8/9: 127-145.

[2] E.J. Kansa (1990) Multiquadrics - A Scattered Data Approximation Scheme with Applications to Computational Fluid-Dynamics - II - Solutions to Parabolic, Hyperbolic and Elliptic Partial Differential Equations. Computers Math. Applic. Vol. 19, No. 8/9: 147-161.

[3] A. I. Fedoseyev, M. J. Friedman, E. J. Kansa (2002) Improved Multiquadric Method for Elliptic Partial Differential Equations via PDE Collocation on the Boundary. Computers and Mathematics with Aplications 43 (2002) 439-455.

[4] R. L. Hardy (1990) Theory and Applications of the Multiquadric-Biharmonic Method. Computers Math. Applic. Vol. 19, No. 8/9: 163-208.

[5] A.E.H. Love, A Treatise on the Mathematical Theory of Elasticity, Dover Publications, New York, fourth edition, 1944.

[6] C. V. Deutsch, A. G. Journel (1998) GSLIB Geostatistical Software Library and User's Guide. Oxford University Press.

[7] J. Bear, A. Verruijt (1987) Modeling Groundwater Flow and Pollution. D. Reidel Publishing Company, Dordrecht, Holland.